Specifications

SL1 Series Super Limit Switches

FEATURES

Mechanical Life of 20 Million Operations, High Sealability and Highly Robust Long-life and Maintenance-free Compact Horizontal Type Limit Switches.

- *EN standard approval acquired. (TÜV, CE marking)*
- *Mechanical life exceeds 20 million operations owing to a 2-piece spring mechanism.*
- *High sensitivity. (M.D.=0.1mm)*
- *High sealability, Oil-resistant/immersion-proof type (JIS) and IP67 (IEC). An O-ring seal and an integral diaphragm seal are built in.*
- *Small, space-saving and tightly gang mounting is possible.*
- *UL/CSA conformed.*

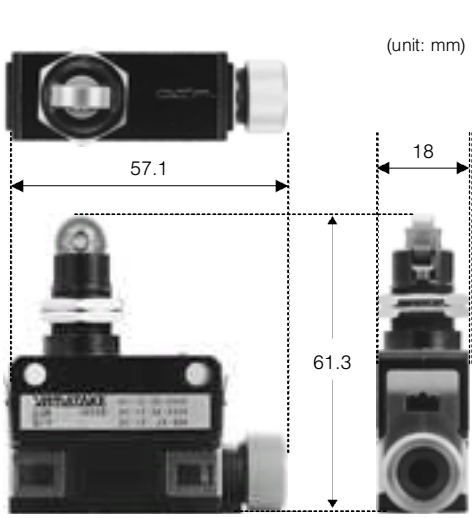

The photograph shows a roller plunger type.
Confirm the detail dimensions by drawings.

Allegheny Electronics
1301 Potomac Ave..
Hagerstown, MD 21742
TEL 800-296-6460 301-739-6460
FAX 800-296-7674 301-739-5311
www.alleghenyelectronics.com

No. CP-PC-2010E

ORDER GUIDE (basic catalog listing)

● Without cord

Actuator		Basic catalog listing	Options			
			Low current load type **K**	Cold and weather resistant type **L**	Cold and weather resistant type + low current load type **KL**	High temperature and high oil resistance Note 1 **V**
Name	Shape					
Roller plunger type		**SL1-A**	**SL1-AK**	**SL1-AL**	**SL1-AKL**	**SL1-AV**
Boot seal roller plunger type		**SL1-B**	**SL1-BK**	**SL1-BL**	**–**	**SL1-BV**
Cross roller plunger type		**SL1-D**	**SL1-DK**	**SL1-DL**	**SL1-DKL**	**SL1-DV**
Long roller plunger type		**SL1-E**	**SL1-EK**	**SL1-EL**	**–**	**SL1-EV**
Plunger type		**SL1-H**	**SL1-HK**	**SL1-HL**	**SL1-HKL**	**SL1-HV**
Short roller lever type		**SL1-P**	**SL1-PK**	**SL1-PL**	**SL1-PKL**	**SL1-PV**

Note 1: UL/CSA/EN standards are not applied.

Note 2: Use with **SL1-PA12**.

EXTERNAL STANDARDS

	Approving body	Standard name	File No.
International approval standards	UL	UL 508 CSA C 22.2 No.14	E 96090
	TÜV	EN 60947-5-1	R 2-50006349
Domestic compliant standards	–	JIS C 8201-5-1 IEC 60947-5-1	–

Allegheny Electronics
1301 Potomac Ave..
Hagerstown, MD 21742
TEL 800-296-6460 301-739-6460
FAX 800-296-7674 301-739-5311
www.alleghenyelectronics.com

Options		
High temperature and high oil resistance + low current load type Note 1 **KV**	Without cover Note 2 **N**	Without cover + low current load type **KN**
SL1-AKV	**SL1-AN**	**SL1-AKN**
–	**–**	**SL1-BKN**
–	**SL1-DN**	**SL1-DSKN**
–	**SL1-EN**	**–**
–	**SL1-HN**	**SL1-HKN**
SL1-PKV	**SL1-PN**	**–**

Allegheny Electronics
1301 Potomac Ave..
Hagerstown, MD 21742
TEL 800-296-6460 301-739-6460
FAX 800-296-7674 301-739-5311
www.alleghenyelectronics.com

PERFORMANCE

Item		Details
External standards	Conformed standards	JIS C 8201-5-1/IEC 60947-5-1
	Approval standards	UL 508/CSA C 22.2 No.14/IEC 60947-5-1 Except high oil and heat resistant type
Structure	Contact type	Single-Pole Double-Throw (SPDT) (Refer to contact type in figure below.)
	Contact shape	Standard load type: Pure silver rivet
		Low current load type: Gold-plated silver, rivet
	Terminal shape	M3 screw and connector
	Protective structure	IP67 (IEC 60529)
	Operating environment pollution level	3
Electrical performance	Electrical rating	See Table 1
	Rated frequency	45 to 65Hz and d.c.
	Insulation resistance	Between non-continuous terminals: 100MΩ. Between each terminal and non-conducting metal part: 100MΩ.
	Rated insulation resistance (Ui)	250V Dielectric strength between each terminal and non-conducting metal part: 2,000Vac (50 to 60Hz, 5s, leak current 1mA)
	Dielectric strength between contacts	1,000Vac (50 to 60Hz, 5s, leak current 1mA)
	Rated impulse dielectric strength (Ump)	2,500V
	Switching overcurrent	Category II
	Initial contact resistance	Silver contact: 50mΩ max. (6 to 8Vdc, 1A voltage drop method), Gold-plated contact: 100mΩ max. (6 to 8Vdc, 0.1A voltage drop method)
	Contact minimum allowable load	Silver contact: 5mA-24Vdc, 10mA-12Vdc Gold-plated contact: 5mA-5Vdc
	Rated energizing current (Ith)	Silver contact: 5A Gold-plated contact: 1A (Temperature increase: 65°C max.)
	Short-circuit protection mechanism	M10A (IEC 60127)
	Conditional rated short-circuit current	1,000A (power factor 0.5 to 0.7)
Mechanical performance	Actuator strength	Withstand load 5 times O.F. (operating direction for 1 minute)
	Terminal strength	Withstand tightening strength of 0.6N-m for 1 minute
	Impact resistance (malfunction)	300m/s^2, Contact release of 1ms max. at free position and operating limit positions
	Vibration resistance (malfunction)	Frequency 10 to 55Hz, 1.5mm peak-to-peak amplitude for 2 continuous hours Contact release of 1ms max. at free position and operating limit positions or operating limit position
	Allowable operating speed	0.02mm/s to 0.5m/s. 0.02mm/s to 0.25m/s on the **SL1-B** Series
	Mechanical operating frequency	Max. 120 operations/minute. Max. 60 operations/minute on cold and weather resistant/high oil and heat resistant types.
Life	Mechanical life	Min. 20 million operations. Min. 2 million operations on the **SL1-B** Series. Min. 1 million operations on cold and weather resistant type. Min. 2 million operations on high oil resistant heat resistant type. Overtravel (O.T.) is 70 to 100% of standard value.
	Electrical life	Standard load type: Min. 2 million operations (125Vac-1A resistive load) Min. 300,000 operations (125Vac-5A, 30Vdc-5A resistive load) Low current load type: Min. 5 million operations (125Vac-0.1A, 48Vdc-0.1A resistive load)
Environmental conditions	Operating ambient temperature	Standard type: −10 to +70°C Cold and weather resistant type: −40 to +70°C (other than below) −30 to +70°C on **SL1-B** (freezing not allowed) High oil and heat resistant type: 0 to 120°C
	Operating ambient humidity	Max. 98%RH
Recommended tightening torque	Body	1.3 to 1.7N-m (M4 hexagon socket head bolt)
	Terminal screw	0.4 to 0.6N-m (M3 binding head machine screw)
	Panel mounting nut	4 to 6N-m (M14 hexagonal nut)

Allegheny Electronics
1301 Potomac Ave..
Hagerstown, MD 21742
TEL 800-296-6460 301-739-6460
FAX 800-296-7674 301-739-5311
www.alleghenyelectronics.com

Table 1. Electrical rating

Item	Contact material	JIS/IEC/EN	UL/CSA
Standard load type	Silver	AC-15: 3A-250V AC-12: 5A-250V DC-12: 2A-48V	5A-250Vac General Use Load 5A-30Vdc
Low current load type	Gold-plated	AC-12: 0.1A-125V DC-12: 0.1A-48V	0.1A-125Vac General Use Load 0.1A-30Vdc

- Reference rating (Ratings fluctuate according to the operating environment and type of load. Check values on an actual operating unit.)

• Standard load model: Silver contact

AC rating	125Vac				250Vac			
	Resistance	Induction	Electric motor		Resistance	Induction	Electric motor	
			N.C.	N.O.			N.C.	N.O.
Current (A)	5	3	1	2	5	3	0.5	1

DC rating	8Vdc		14Vdc		30Vdc		115Vdc		230Vdc	
	Resistance	Induction	Resistance	Induction	Resistance	Induction	Resistance	Induction	Resistance	Induction
Current (A)	5	3	5	3	5	3	0.5	0.1	0.25	0.05

• Low current load type: Gold-plated contact

AC rating	115Vac	
	Resistance	Induction
Current (A)	0.1	–

DC rating	8Vdc		14Vdc		30Vdc	
	Resistance	Induction	Resistance	Induction	Resistance	Induction
Current (A)	0.1	–	0.1	–	0.1	–

Note: ''Inductive load'' refers to a load having a power factor of 0.4 and time constant 7ms (DC). ''Electric motor load'' refers to a load having an inrush current value of six times.

CONTACT TYPE

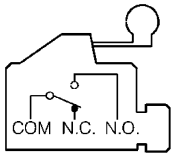

Roller lever type

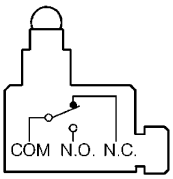

Roller plunger type

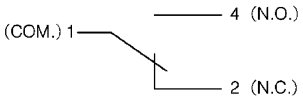

(EN60947 – 5 – 1)

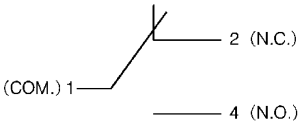

(EN60947 – 5 – 1)

Allegheny Electronics
1301 Potomac Ave..
Hagerstown, MD 21742
TEL 800-296-6460 301-739-6460
FAX 800-296-7674 301-739-5311
www.alleghenyelectronics.com

AUXILARY PARTS

Name	Appearance	Specifications	Catalog listing
PA5 Series connector cover	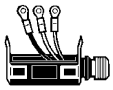	For DC type, 3 leads	**SL1-PA5I3**
Terminal cover one set	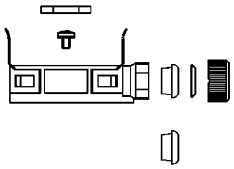	Cover, panel mounting nuts (2), cap nut, washer and seals (for 5.8 to 7.8dia. cord and for 7.9 to 9.6dia. cord)	**SL1-PA12**
Seal		Seal for 7.9 to 9.6dia. cord: For standard type, material - NBR containing PVC, and 10 pieces per set	**SL1-PA22**
		Seal for 7.9 to 9.6dia. cord: For cold and weather resistant type, material - fluorosilicone rubber, and 10 pieces per set	**SL1-PA23**
		Seal for 7.9 to 9.6dia. cord: For high temperature and high oil resistant type, material - fluorocarbon rubber, and 10 pieces per unit	**SL1-PA24**

● Connector for **SL1** Series

The **SL1** Series can be modified into a connector type by assembling **SL1-PA513** below parts onto the **SL1** switch body.

At this time, either replace the terminal cover of the **SL1** standard type switch with the seal connector with cord, or assemble the terminal cover-less type switch.

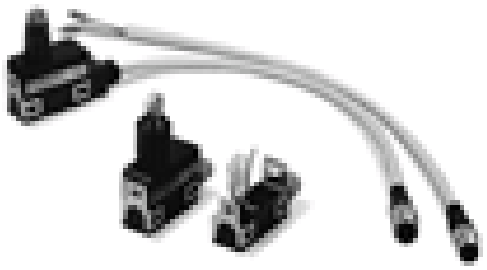

• Assembly method

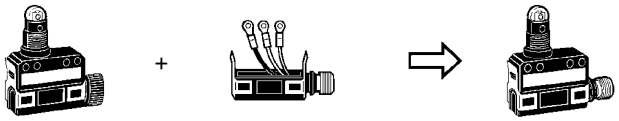

SL1 body catalog listing appended with N

+

Connector cover Catalog listing **SL1-PA513**

Connector type **SL1**

• Wiring diagrams

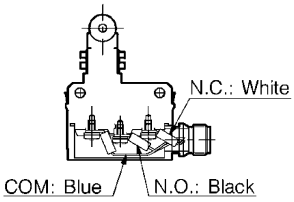

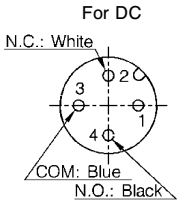

External dimensions

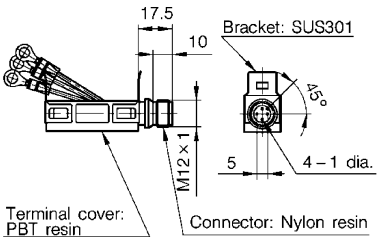

Allegheny Electronics
1301 Potomac Ave..
Hagerstown, MD 21742
TEL 800-296-6460 301-739-6460
FAX 800-296-7674 301-739-5311
www.alleghenyelectronics.com

● Electrical life characteristics

• Normal load type

- In case of AC contact voltage

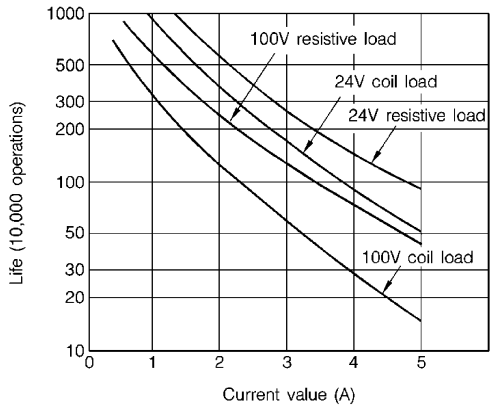

- In case of DC contact voltage

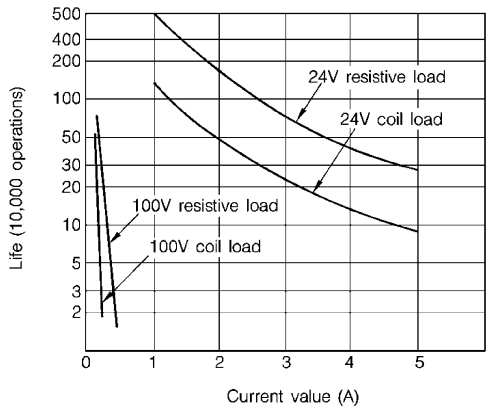

• Low current load type

- In case of AC contact voltage

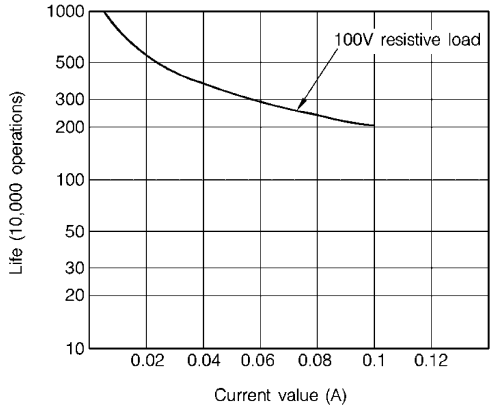

- In case of DC contact voltage

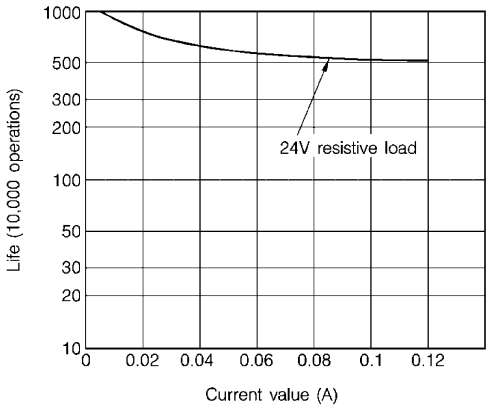

STRUCTURE DIAGRAMS

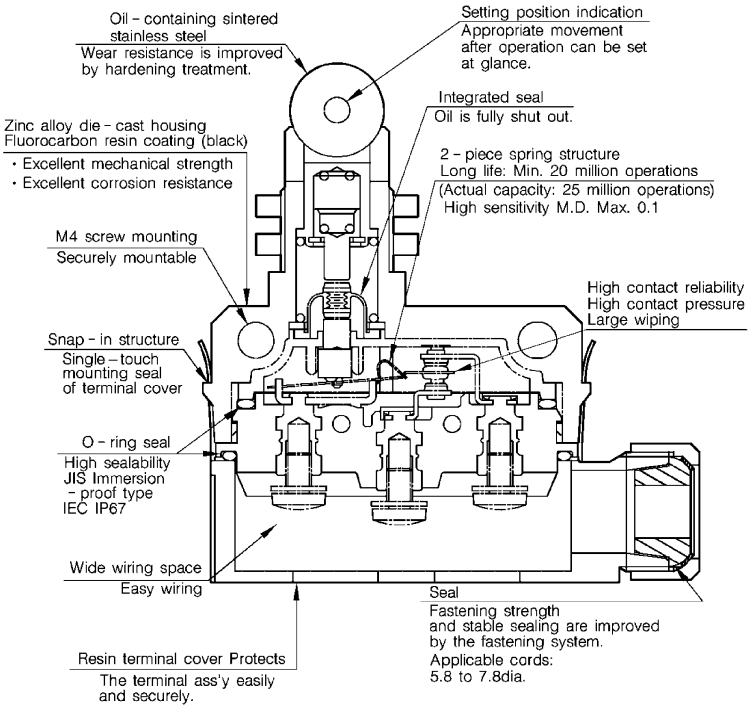

Roller plunger type

Allegheny Electronics

1301 Potomac Ave..

Hagerstown, MD 21742

TEL 800-296-6460 301-739-6460

FAX 800-296-7674 301-739-5311

www.alleghenyelectronics.com

APPEARANCE, OPERATING CHARACTERISTICS AND EXTERNAL DIMENSIONS

(unit: mm)

Roller plunger type

Catalog listing	SL1-A□□
Operating force O.F. (N max.)	11.8
Release force R.F. (N min.)	4.9
Pretravel P.T. (mm max.)	1.5
Overtravel O.T. (mm min.)	3
Movement differential M.D. (mm max.)	0.1
Operating position R.P. (mm)	31.4±0.8

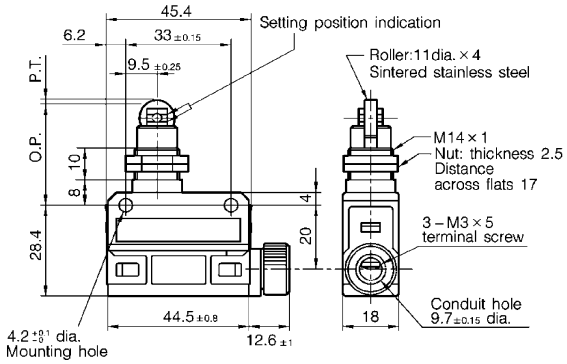

Boot seal roller plunger type

Catalog listing	SL1-B□□
Operating force O.F. (N max.)	11.8
Release force R.F. (N min.)	4.9
Pretravel P.T. (mm max.)	1.5
Overtravel O.T. (mm min.)	3
Movement differential M.D. (mm max.)	0.1
Operating position R.P. (mm)	41.4±0.8

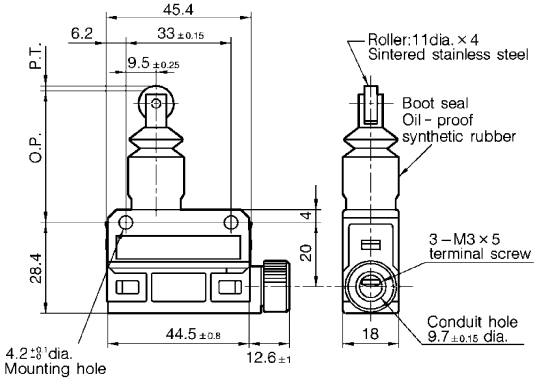

Cross roller plunger type

Catalog listing	SL1-D□□
Operating force O.F. (N max.)	11.8
Release force R.F. (N min.)	4.9
Pretravel P.T. (mm max.)	1.5
Overtravel O.T. (mm min.)	3
Movement differential M.D. (mm max.)	0.1
Operating position R.P. (mm)	31.4±0.8

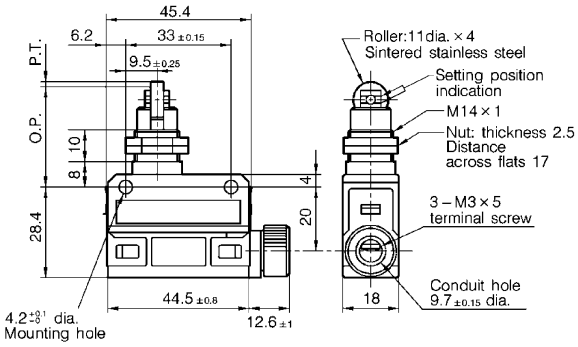

Long roller plunger type

Catalog listing	SL1-E□□
Operating force O.F. (N max.)	11.8
Release force R.F. (N min.)	4.9
Pretravel P.T. (mm max.)	1.5
Overtravel O.T. (mm min.)	3
Movement differential M.D. (mm max.)	0.1
Operating position R.P. (mm)	41.4±0.8

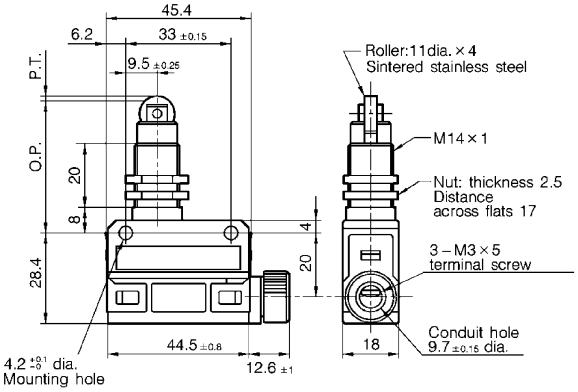

(unit: mm)

Plunger type

Catalog listing	**SL1-H□□**
Operating force O.F. (N max.)	11.8
Release force R.F. (N min.)	4.9
Pretravel P.T. (mm max.)	1.5
Overtravel O.T. (mm min.)	3
Movement differential M.D. (mm max.)	0.1
Operating position R.P. (mm)	25.4 ±0.8

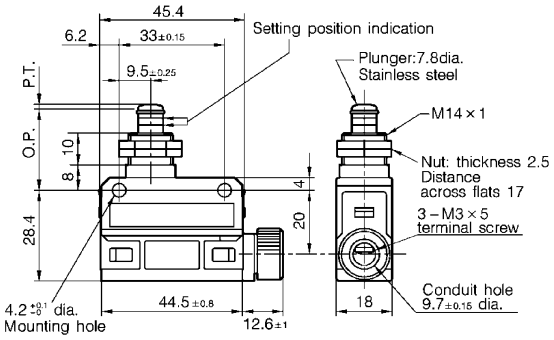

Short roller lever type

Catalog listing	**SL1-P□□**
Operating force O.F. (N max.)	4.0
Release force R.F. (N min.)	0.78
Pretravel P.T. (mm max.)	2
Overtravel O.T. (mm min.)	4
Movement differential M.D. (mm max.)	0.3
Operating position R.P. (mm)	23.1 ±0.8

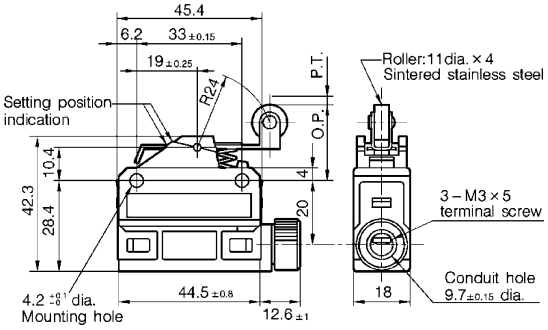

Allegheny Electronics
1301 Potomac Ave..
Hagerstown, MD 21742
TEL 800-296-6460 301-739-6460
FAX 800-296-7674 301-739-5311
www.alleghenyelectronics.com

PRECAUTIONS UPON USE

● Profiling lead wire tips

- Profile the lead wire tip as illustrated below, and use a round crimp-type terminal lug having an M3 insulation sleeve. A bare crimp-type terminal lug will cause a short-circuit failure. If a bare crimp-type terminal lug is used due to unavoidable circumstances, insulate it with a mark tube or the like, or assemble the terminal in the opposite direction for the purpose of preventing a short-circuit failure.

Lead wire connection direction and recommendable cutting sizes

- In case of 3-core

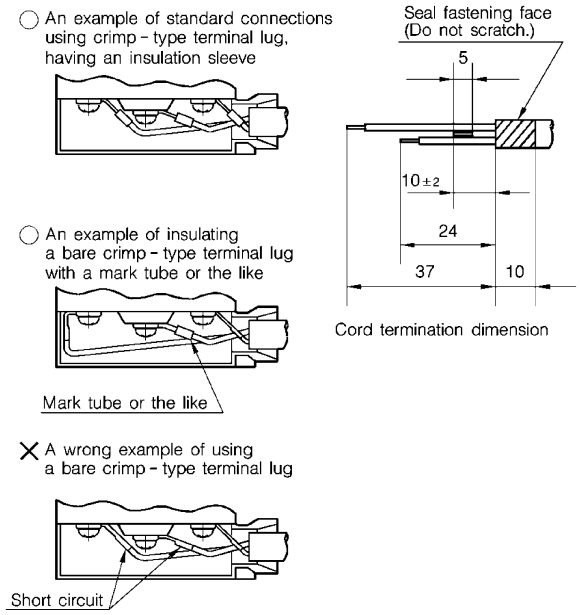

- In case of 2-core

(unit: mm)

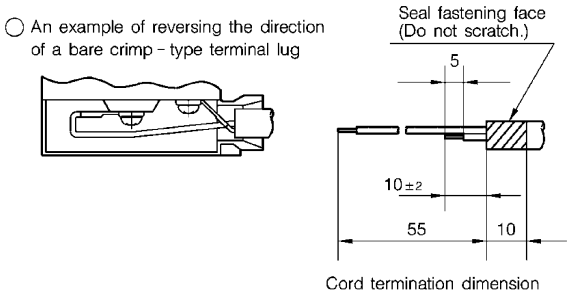

● Wiring

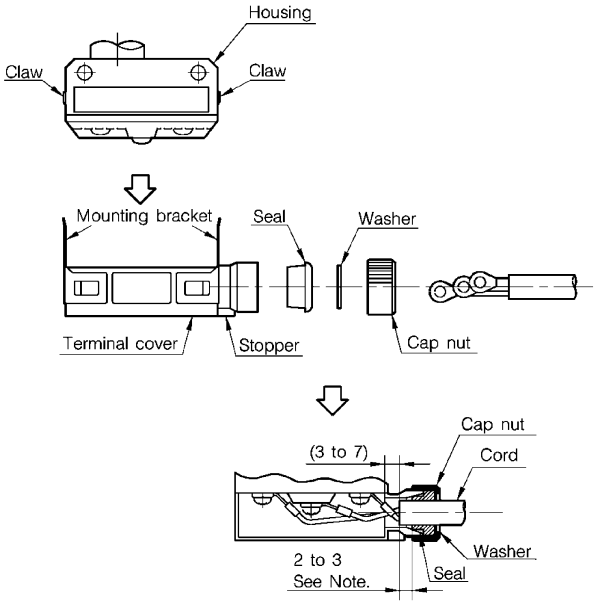

Note: Assemble these components so that the cord sheath is 2 to 3mm protruded from the seal end face.

- Assemble the cord in the order of cap nut, washer, seal and terminal cover.
- Make sure that the mounting bracket of the terminal cover is held by the claws of the housing in this snap-in structure. Then tighten with the cap nut.
- To remove the terminal cover, release the snap-in structure by expanding the mounting bracket on one side by using a minus screwdriver.
- A cord can be drawn out rightward or leftward by changing the mounting direction of the terminal cover.
- Be careful since the layout of terminals is different between the (roller) lever type and (roller) plunger type as illustrated below.

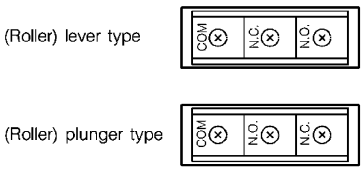

- A seal of an applicable cord diameter of 5.8 to 7.8 is assembled to the terminal cover at the delivery time. When a cord of a diameter other than 5.8 to 7.8mmdia. is used, use a replacement seal **SL1-PA22, SL1-PA23** or **SL1-PA24** (sold separately). To secure sealability, be sure to use a seal meating with the diameter of cord. If a question arises, please contact your nearest Yamatake's sales agent.

Allegheny Electronics
1301 Potomac Ave..
Hagerstown, MD 21742
TEL 800-296-6460 301-739-6460
FAX 800-296-7674 301-739-5311
www.alleghenyelectronics.com

RESTRICIONS ON USE

This product has been designed, developed and manufactured for general-purpose application in machinery and equipment. Accordingly, when used in applications outlined below, special care should be taken to implement a fail-safe and/or redundant design concept as well as a periodic maintenance program.

- Safety devices for plant worker protection
- Start/stop control devices for transportation and material handling machines
- Aeronautical/aerospace machines
- Control devices for nuclear reactors

Never use this product in applications where human safety may be put at risk.

YAMATAKE

Specifications are subject to change without notice.

Yamatake Corporation
Advanced Automation Company

International Business Headquarters
Totate International Building
2-12-19 Shibuya Shibuya-ku
Tokyo 150-8316 Japan
URL:http://www.yamatake.com

Allegheny Electronics
1301 Potomac Ave..
Hagerstown, MD 21742
TEL 800-296-6460 301-739-6460
FAX 800-296-7674 301-739-5311
www.alleghenyelectronics.com

1st Edition: Issued in Apr., 2002
2nd Edition: Issued in Oct., 2003